DUNCAN STUART TODD

THE PREPARATION ROOM SPECIALISTS | SINCE 1991

TECHNICAL INFORMATION

PREPARM LEV 2

DST 111, DST 112

PrepArm LEV 2 is a product for localized exhaust ventilation in the preparation room. It is engineered for precise “spot extraction” with variable air volume control. The arm is designed with state-of-the-art multi-joint maneuverability that allows the embalmer nearly unlimited positioning.

FEATURES

- Specifically for localized exhaust ventilation (LEV)
- Prevents noxious vapors from entering the general airstream of the embalming room and the practitioner’s respiratory system.
- Transparent hood with low optical distortion that can be tilted in all directions.
- LED lighting mounted in hood
- Low noise level
- Folds away when not in use

SPECIFICATIONS

- Swivels through full 360° range
- Anodized aluminum tubes with polypropylene joints
- Pulling gas spring facilitates movement of extractor
- Variable mounting bracket lengths accommodate most ceiling heights

ph 720.583.1886 fx 877.507.5560 duncanstuarttodd.com

3/1/2017

PREPARM LEV 2 DIMENSIONAL DATA

Diameter (inches)	Mounting Type	A (inches)	B (inches)	Length (inches)	Weight (lbs.)
4	Ceiling	30	22	66	13

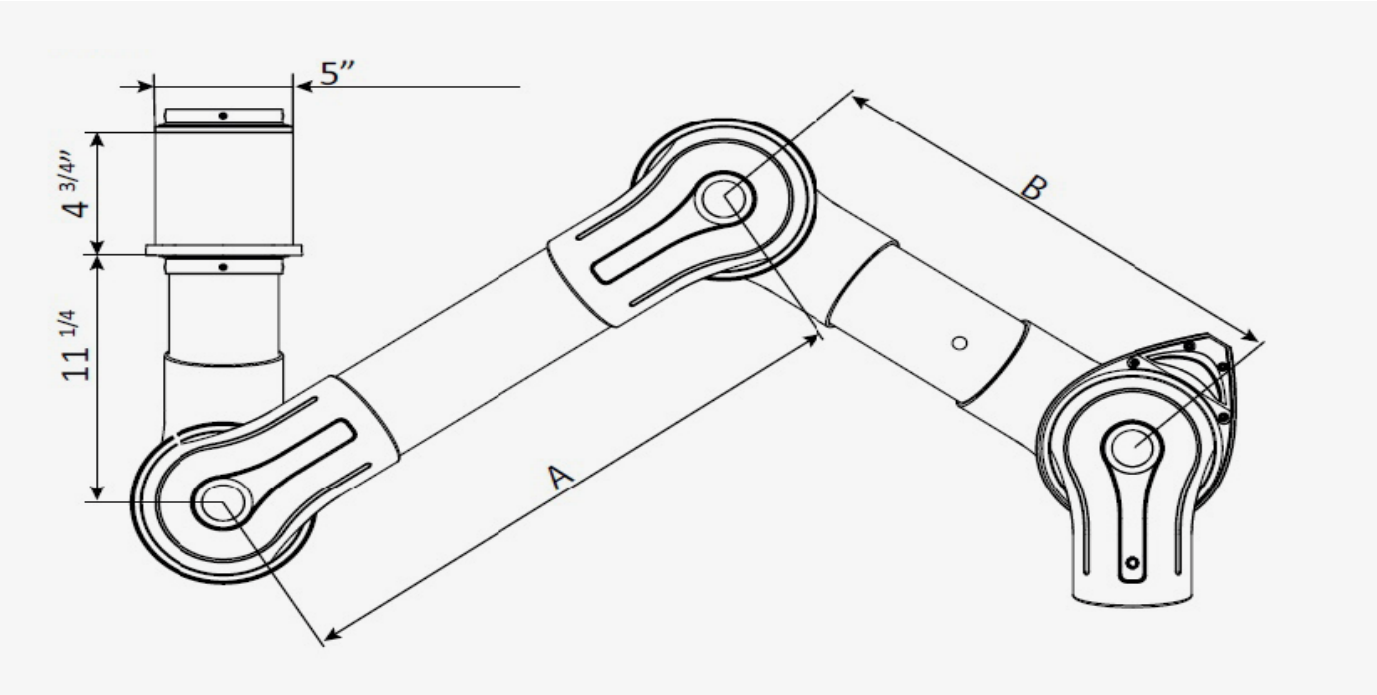

ph 720.583.1886 fx 877.507.5560 duncanstuarttodd.com

PREPARM LEV 2 SOUND AND PRESSURE DROP DATA

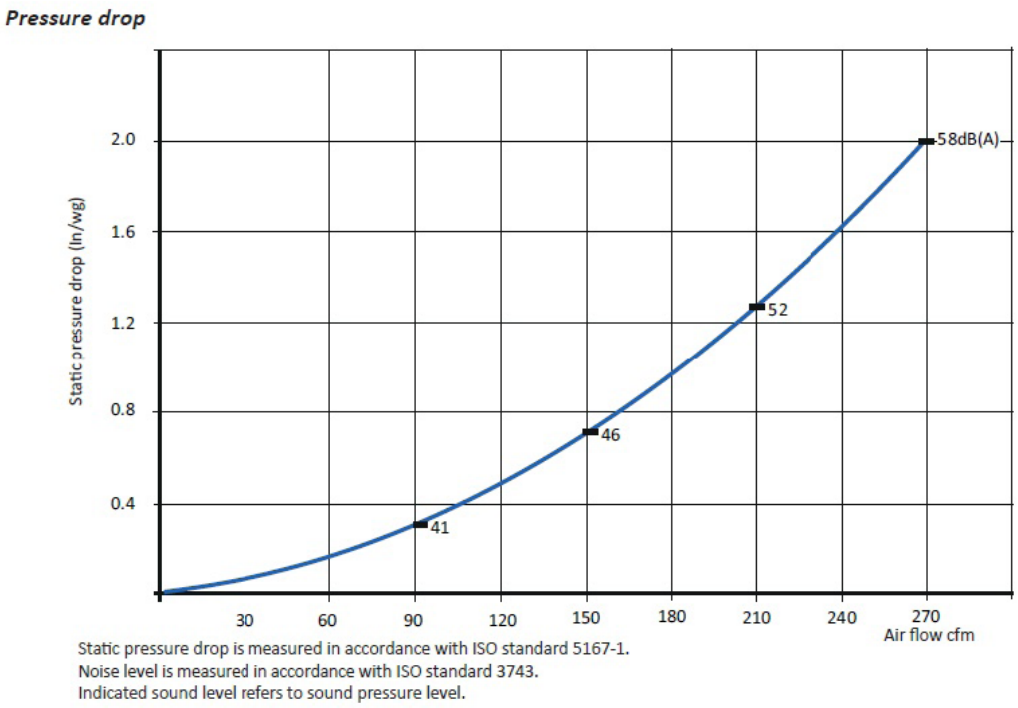

Recommended Airflow (CFM)	Ø 4”	120 - 180

ph 720.583.1886 fx 877.507.5560 duncanstuarttodd.com